DUST & POLLUTION
PURIFIER LAMP

DESIGNED IN GERMANY

AIR PURIFIER & LIGHT



OPERATING MANUAL

dp Pro

Ceiling-mounted air purifier with integrated LED lighting

Version 2.2 (2026-11) · English

www.dp-purifier.com

About this manual

All illustrations in this operating manual are examples only and may differ from the device actually delivered. The app screenshots are based on the Android app and may not reflect the current version of the app.

The app runs on most smartphones and tablets (Android and iOS), hereinafter collectively referred to as “mobile devices”.

Read this operating manual in full before installing and commissioning the device, and keep it for future reference.

Manufacturer and service contact

Manufacturer	**Dust and Pollution Air Purifier Lamp FZC** Business Centre, Sharjah Publishing City Free Zone Sharjah, United Arab Emirates
Represented by	Gabriel Adam Jasseb
Phone	+49 176 31701113 +49 6105 9639681
Email	order@dust-pollution.com
Website	www.dp-purifier.com

Designed in Germany.
© 2026 Dust and Pollution Air Purifier Lamp FZC
Operating Manual dp Pro, Version 2.2 (2026-11)

Contents

Manufacturer and service contact 2

1 Introduction: the dp Pro 4
- How it works 4

2 Safety 6
- Intended use 6
- General safety instructions 6
- Limits of filtration 6
- UV-C light 6
- Safety instructions for special situations 7

3 Operation 8

4 “dp Air Purifier Lamp” app 8
- Installing the app 8
- Connecting the app to the dp Pro 8
- Controlling the dp Pro with the app 10
- Connecting the app to another dp Pro 11
- Connecting the dp Pro to an existing Wi-Fi network 11
- Resetting or reconfiguring the Wi-Fi connection 12

5 Cleaning, filter replacement, repairs 12
- Cleaning 12
- Filter replacement 12
- Troubleshooting 13
- Repairs 14

6 Installation 14
- Recommendations 14
- Safety 14
- Mounting and connection 14

7 Transport, storage, uninstallation, disposal 18
- Transport and storage 18
- Uninstallation 18
- Disposal 18

8 Technical data 19
- Nameplate 21

9 Privacy policy 22
- 6. dp Pro and use of the app 22

© 2026 Dust and Pollution Air Purifier Lamp FZC

1 Introduction: the dp Pro

The dp Pro combines an air purifier and a ceiling light. The air purifier draws in room air and passes it through a multi-stage filter system: an optional activated carbon filter binds volatile organic compounds (VOCs) and odours; then a HEPA H10 pre-filter and a HEPA H14 filter retain particles such as fine dust, pollen and mould spores. Three LED light strips arranged around the outside of the air purifier illuminate the room.

For optimal operation of the air purifier and the light, the dp Pro is suspended from the ceiling, where it replaces a conventional ceiling light.



1. UV-C LED modules, radial fan (inside the housing)
2. Middle light strip
3. Filter (inside the housing)
4. Cover with air intake openings, access to the filters
5. Bottom light strip

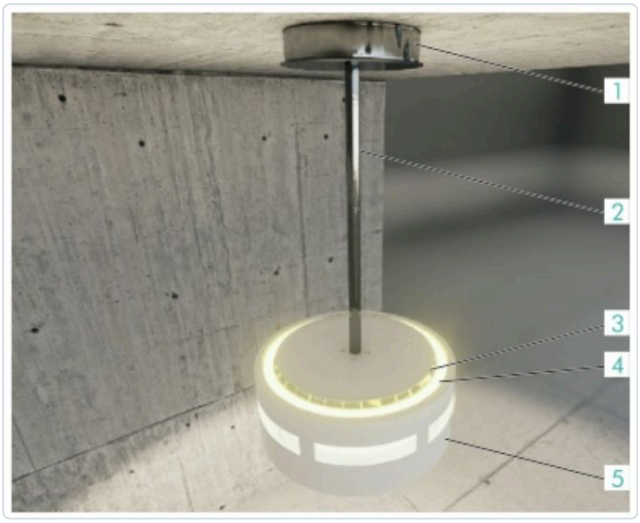

1. Canopy of the ceiling mount
2. Sturdy pipe
3. Air openings, outlet for filtered air
4. Top light strip
5. Housing

The dp Pro is switched on and off with a standard light switch. In addition, the app on your smartphone or tablet lets you control:

- the fan speed and thus the volume of air filtered (manual or automatic mode),
- brightness and colour temperature of the three light strips,
- UV-C irradiation of the filter surface (on/off),
- operating schedules.

The app also displays the following status information: air temperature, humidity, air quality (air quality index) and filter condition or remaining filter life.

How it works

Room air is drawn into the device from below, passes first through the activated carbon filter (if fitted), then the HEPA H10 pre-filter and the HEPA H14 filter. The filters are sealed into the partition wall; above it, the UV-C LED modules irradiate the filter surface. The radial fan then draws in the filtered air and blows it out through the side openings at the top of the housing. Thanks to the air guidance, the air is discharged radially in all directions (360°). This creates a layer of filtered air at the ceiling.

© 2026 Dust and Pollution Air Purifier Lamp FZC

As more air keeps flowing in, this layer is continuously pushed downwards, where it displaces the unfiltered room air. This results in air being drawn in over a large area and the filtered air being distributed throughout the room. The central position on the ceiling and the optimised air guidance ensure largely even air circulation throughout the room.

> **Performance:** The dp Pro achieves an airflow of up to 550 m^3/h. At the recommended air exchange rate of approx. 3 times per hour, this corresponds to a room volume of approx. 183 m^3. The dp Pro is therefore suitable for living areas of up to approx. 55 m^2 (depending on ceiling height, use and target air exchange rate).

Filtration performance is determined by the following components:

- **Activated carbon filter (optional):** binds volatile organic compounds (VOCs) and odours, such as those released by solvents, adhesives and synthetic resins in furniture, floor coverings and building materials, or contained in road-traffic exhaust.
- **HEPA H10 pre-filter:** retains coarser particles and relieves the downstream main filter.
- **HEPA H14 filter:** retains particles from the air, e.g. fine dust, pollen and mould spores. Filter efficiency is ≥ 99.995 % at MPPS (most penetrating particle size) according to EN 1822.
- **UV-C LED modules:** Four encapsulated UV-C LED modules above the partition wall irradiate only the filter surface inside the closed housing. People in the room are not exposed. The UV-C function can be switched on and off in the app.

© 2026 Dust and Pollution Air Purifier Lamp FZC

2 Safety

Intended use

The dp Pro is intended for filtering normally polluted indoor air, e.g. in living rooms, classrooms and offices. If the composition of pollutants in a room is atypical or their concentration is unusually high, it is your responsibility as the user or operator to ensure that the filtration performance is sufficient for the pollution level.

The dp Pro also serves as a ceiling light to illuminate the room.

The dp Pro has a Wi-Fi module (2.4 GHz) that allows it to be controlled from mobile devices with Wi-Fi and the associated app.

The dp Pro is not suitable for rooms with condensing humidity or hot air. With heavy dust loads (e.g. workshops, production, welding and grinding work) it provides additional room air cleaning; it does not replace extraction at the source, and the filter service life is reduced. In small operating and treatment rooms it is suitable as additional recirculating air cleaning, but it does not replace the ventilation and air-conditioning system. Use in potentially explosive atmospheres is prohibited. The dp Pro must not be exposed to direct sparks; mount it at least 2.5 m above the floor (see chapter 8).

General safety instructions

The dp Pro is safe according to the state of the art when this operating manual, including all safety instructions it contains, is observed. Therefore, read the operating manual in full and observe all information it contains. Make the operating manual available to everyone who handles the dp Pro.

> ⚠ **WARNING! Risk of falling!** When working on the mounted dp Pro, use a free-standing ladder or another suitable climbing aid of sufficient height so that you do not have to work above head height.

Limits of filtration

Every air purification system has limits to its effectiveness:

- The filters are designed for specific pollutants and pollutant concentrations.
- The filters lose effectiveness over their service life.

Replace the filters in good time, at the latest when the app indicates that a filter change is due (filter alert at 80 % depletion; filter life approx. 2,200 operating hours).

Contact the manufacturer if you are unsure whether the filtration performance is sufficient for the respective air pollution. If special requirements apply to the air quality in the room, measurements by a specialist laboratory may be required.

The dp Pro is not a medical device and does not replace regular ventilation of the room.

UV-C light

The four UV-C LED modules are encapsulated in the closed housing and irradiate only the filter surface. Due to the design, no UV-C light escapes to the outside; people in the room are not exposed. The dp Pro may only be operated with a fully intact and closed housing.

© 2026 Dust and Pollution Air Purifier Lamp FZC



WARNING! UV-C radiation can damage eyes and skin! Do not switch on the dp Pro if the housing is damaged or the interior is visible. Always switch the dp Pro off at the light switch before removing the cover.

Safety instructions for special situations

Installation



WARNING! Risk of injury from electric shock! The dp Pro is an electrical device that is connected to the mains (220–240 V) via screw terminals. Incorrect connection can result in fatal injuries. Have the electrical connection carried out by an electrician licensed in your region. In Germany, only electricians authorised by the respective grid operator may connect the dp Pro.



WARNING! Risk of injury from a falling device! The dp Pro weighs 11 kg and is therefore heavier than standard ceiling lights. Strictly follow the instructions in chapter 6 “Installation”. The dp Pro may only be mounted using the ceiling bracket supplied, never on standard ceiling hooks.

Repairs

The components inside the housing are not intended to be repaired by the customer or third parties. This operating manual therefore contains no safety information on such repairs. The housing must not be opened except to replace the filters.

Fire

The optional activated carbon filter represents an additional fire load in the event of a fire.

© 2026 Dust and Pollution Air Purifier Lamp FZC

3 Operation

You operate the dp Pro:

- with the light switch of the building installation (on/off),
- with the “dp Air Purifier Lamp” app on your mobile device (see chapter 4),
- with the remote control supplied.

4 “dp Air Purifier Lamp” app

You control the dp Pro with the “dp Air Purifier Lamp” app. To do so, you must:

- install the app on your smartphone or tablet,
- connect the app to your dp Pro.

> **Wi-Fi password of the dp Pro:** `12345678`

Installing the app

Download and install the app from your mobile device’s store:

Device / operating system	Store	Search term
Android	Google Play Store	dpLamp
Apple iOS	App Store	dpLamp

Connecting the app to the dp Pro

The app and the dp Pro communicate via Wi-Fi (2.4 GHz, IEEE 802.11b/g/n). For this purpose, the dp Pro provides its own Wi-Fi hotspot. You have two options:

- **Hotspot mode:** You connect your mobile device directly to the Wi-Fi hotspot of the dp Pro (Wi-Fi password: `12345678`). This option is described below.
- **LAN mode:** You connect the dp Pro to your existing Wi-Fi network and access the dp Pro from your mobile device via this network. See section “Connecting the dp Pro to an existing Wi-Fi network” on page 11.

Once the mobile device is connected to the Wi-Fi network, the app must then be connected to the dp Pro.

Connecting the mobile device to the Wi-Fi hotspot of the dp Pro

1. Make sure that the dp Pro is switched on (i.e. supplied with power via the light switch in the room).
2. On the mobile device, with Wi-Fi switched on, search for the network “DP Lamp” in the Wi-Fi settings and select it.
3. Enter the Wi-Fi password: `12345678`

Once you have connected to the Wi-Fi hotspot, you only need to select it from the list in future. You do not need to enter the password again.

© 2026 Dust and Pollution Air Purifier Lamp FZC

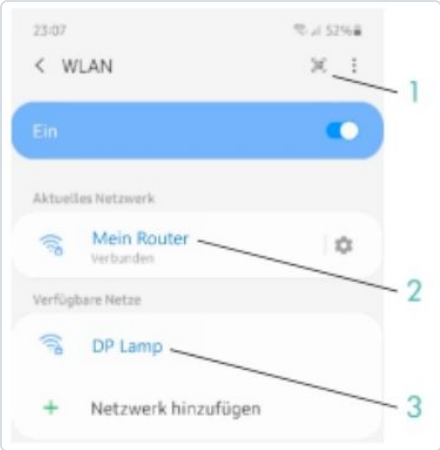

Wi-Fi settings (Android example)

1. Wi-Fi settings of the mobile device
2. Currently connected Wi-Fi network
3. Available Wi-Fi network “DP Lamp” (hotspot of the dp Pro)

The screenshot shows a German-language phone. Terms:

WLAN	Wi-Fi
Ein	On
Aktuelles Netzwerk	Current network
Mein Router · Verbunden	My router · Connected
Verfügbare Netze	Available networks
Netzwerk hinzufügen	Add network

Connecting the app to the dp Pro

1. Make sure that the device-specific QR code of this dp Pro is available. The QR code is supplied as a paper printout. If the printout is no longer available, a copy can be found inside the housing (visible after removing the filter).

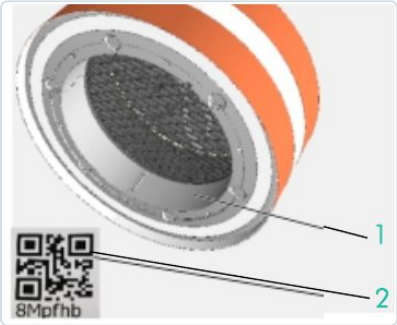

1. Position of the nameplate and QR code in the housing of the dp Pro
2. Example of a QR code with character string

2. Switch on the dp Pro.
3. Open the home screen of the app.
4. Tap the plus symbol at the bottom of the screen.
5. Hold the QR code in front of the camera. Once the QR code has been recognised, the app connects to the dp Pro. The app functions for this dp Pro are then available.
   If the QR code is not recognised, the character string below the QR code can be entered manually.

© 2026 Dust and Pollution Air Purifier Lamp FZC

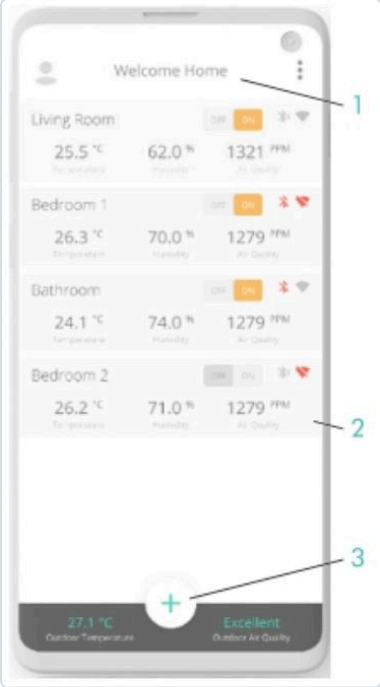

App home screen

1. App home screen
2. List of devices already connected
3. Plus symbol for adding a device

Controlling the dp Pro with the app

Two app screens are essential for controlling the dp Pro:

- the **overview screen** with all connected devices (app home screen),
- the three-part **detail screen** for a specific device.

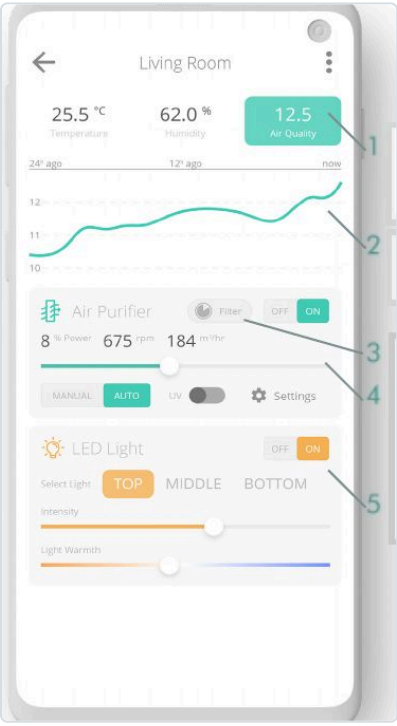

Detail screen

1. Status information: air temperature, humidity, air quality
2. History of the selected status information
3. Air filter condition
4. Air purification control
5. Lighting control

Detail screen

- Status information:
  - Room temperature
  - Relative humidity

© 2026 Dust and Pollution Air Purifier Lamp FZC

- Air quality based on the fine dust concentration in the air (PM2.5)

Pressing and holding a value displays further measurement results.

- Air purification settings:
  - On/off
  - Fan speed
  - Manual (MANUAL) or automatic (AUTO) mode
  - UV-C on/off – the UV-C function can only be switched on while the fan is running.

  The filter condition is also shown in this area: the opening of the circle indicates what percentage of the filter is already depleted.
- Lighting settings:
  - On/off
  - Brightness of each of the three light strips (top, middle, bottom)
  - Colour temperature of each of the three light strips, continuously variable from 2,700 K (warm white) to 6,000 K (cool daylight)
- Schedule: the app's schedule function lets you define operating times.

Entering the room size – threefold air exchange

If you press and hold the air purification control (4), a screen appears on which you can enter the approximate width and length of your room.

The app then automatically calculates the fan speed at which the room air is circulated approx. 3 times per hour.

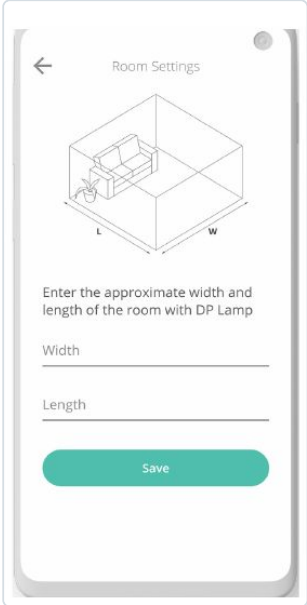

Connecting the app to another dp Pro

If you want to control several dp Pro units via the app, connect to the Wi-Fi hotspot of each device in turn and then add the device in the app as described above.

Connecting the dp Pro to an existing Wi-Fi network

Prerequisite: Your Wi-Fi router provides a 2.4 GHz network and is configured so that devices on the Wi-Fi network can communicate with each other. If necessary, contact the administrator of your Wi-Fi network.

1. Connect the mobile device directly to the Wi-Fi hotspot of the dp Pro and then connect the app to the dp Pro (see above).
2. In the app, open the settings (three-dot menu) and select the menu item "Wifi Config".
3. Configure the Wi-Fi connection so that the dp Pro logs into your existing Wi-Fi network.

© 2026 Dust and Pollution Air Purifier Lamp FZC

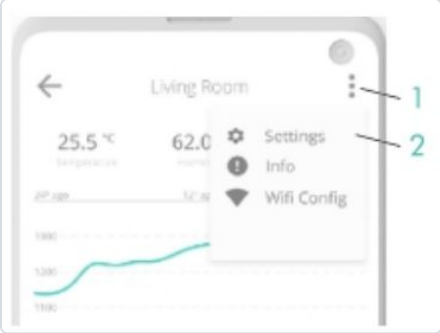

1 Settings
2 Menu item “Wifi Config” for Wi-Fi configuration

Resetting or reconfiguring the Wi-Fi connection

If you want to change the connection to the Wi-Fi network, there are two situations:

- **The Wi-Fi network is still working** and you can connect to the dp Pro: open the menu item “Wifi Config” in the settings and change the settings as required.
- **The Wi-Fi network is no longer working:** connect your mobile device to the Wi-Fi hotspot of the dp Pro to change the settings. See section “Connecting the app to the dp Pro” on page 8.

5 Cleaning, filter replacement, repairs

Cleaning

> **WARNING! Risk of falling!** When working on the mounted dp Pro, use a free-standing ladder of sufficient height.

Clean the dp Pro as follows:

1. Switch off the dp Pro at the light switch.
2. Make sure that the room is sufficiently lit for the work even without the dp Pro (e.g. daylight, a second light).
3. Clean only the outer surfaces; do not open the housing.
4. Wipe off dust with a dry duster.
5. Wipe off adhering dirt with a soft, lint-free, slightly damp cloth. For stubborn dirt, use a mild detergent if necessary.

   > **WARNING!** Do not use a wet cloth. No moisture may enter the housing of the dp Pro.

6. Do not switch the dp Pro back on until the housing is completely dry.

Filter replacement

The dp Pro records the load on the filters and uses this to calculate when the next filter change is expected. The filter life is approx. 2,200 operating hours. At approx. 80 % depletion, the app issues a filter alert. When the filter is completely depleted, the fan can no longer be switched on.

© 2026 Dust and Pollution Air Purifier Lamp FZC

Replace the filters when the app prompts you to do so. To ensure filtration performance, use only original filters from the manufacturer (HEPA H10 + HEPA H14, optional activated carbon filter). Replacement filters are available from the manufacturer (for contact details see page 2) or directly via the app.

Procedure

> ⚠ **WARNING! Risk of falling!** When working on the mounted dp Pro, use a free-standing ladder of sufficient height.

1. Switch off the dp Pro at the light switch.
2. Make sure that the room is sufficiently lit for the work even without the dp Pro (e.g. daylight, a second light).
3. Remove the cover from the underside of the housing. The cover is held by magnets: grip the cover by the recessed grips and pull it downwards.
4. Carefully unpack the new filters without unnecessarily damaging the packaging material.
5. Carefully pull the used filters out of the housing, making sure that no dust falls out of the filters.
6. Immediately pack the used filters in the packaging material of the new filters.
7. Insert the new filters into the housing.
8. Put the cover back on the housing. Make sure that the cover is correctly aligned and held securely by the magnets.
9. Finally, check the ceiling mount: is the dp Pro still firmly attached to the ceiling? Correct the ceiling mount if necessary.
10. Switch the dp Pro back on at the light switch.
11. Open the app and connect it to the dp Pro.
12. Use the app to scan the QR code supplied with the new filters. This resets the filter counter.
13. Dispose of the used filters properly.
    New, unused filters can be disposed of with household or commercial waste. Filters that have only been used in a household under normal household conditions can also be disposed of with household waste. For filters that have been exposed to special loads, it is the operator's responsibility to determine the pollutant load of the filter and to ensure disposal in accordance with local regulations.

Troubleshooting

In the event of a (suspected) fault, check the following:

- **Is the filter used up?** The dp Pro continuously records the filter load and uses it to determine when the filter can no longer hold any more particles. The filter condition is shown in the app.
- **Is the housing correctly closed? Has the cover been correctly refitted after the filter change?** The housing is monitored. The dp Pro cannot be switched on as long as monitored housing parts are not correctly fitted.
- **Is the light switch switched on?**
- **Has a fuse or circuit breaker tripped?** Do other electrical devices on the same circuit or in the same room work?
- **Depending on the Wi-Fi configuration:**
  - ☐ Hotspot mode (mobile device connected directly to the hotspot of the dp Pro): is the hotspot "DP Lamp" shown in the list of available Wi-Fi networks on the mobile device?

© 2026 Dust and Pollution Air Purifier Lamp FZC

- ☐ LAN mode (connection via your Wi-Fi network): can you retrieve current data from the dp Pro with the app?

If the answer is “no”, either the dp Pro is not receiving power or the electronics are defective. Have the installation checked by an electrician.

- **Can all three light strips be controlled and set to maximum brightness?** If yes, the dp Pro can be controlled and the light strips are working properly.
- **Can the fan be controlled and set to maximum speed without unexpected noise?** If yes, the dp Pro can be controlled and the air purifier is working properly.

Contact the manufacturer if you still suspect a malfunction of the dp Pro.

Repairs

The dp Pro contains no user-serviceable parts. Contact the manufacturer for all repairs. This also applies if the LED light strips, which are designed to last the life of the device, have failed; the light sources cannot be replaced by the user. The dp Pro comes with a 2-year warranty.

6 Installation

Recommendations

- Have the electrical installation carried out by an electrician. In Germany, only electricians authorised by the respective grid operator may connect the dp Pro.
- Install the dp Pro together with a second person who holds the device (11 kg) in position.

Safety



WARNING! Risk of injury from a falling device!

- The hook usually found in ceilings for ceiling lights is not designed to carry the weight of the dp Pro (11 kg)! The dp Pro may only be mounted on the ceiling using the fastening system supplied.
- It is the installer’s responsibility to ensure that the fastening system is suitable for the ceiling and, together with the ceiling, can safely carry the weight of the dp Pro. Additional measures to reinforce the ceiling may be required.

Mounting and connection



WARNING! Risk of falling! When working on the mounted dp Pro, use a free-standing ladder of sufficient height.



WARNING! Risk of injury from electric shock! Have the electrical connection made only by an electrician.

1. Make sure that the ceiling has sufficient load-bearing capacity and is suitable for the installation.

© 2026 Dust and Pollution Air Purifier Lamp FZC

2. Decide how the ceiling bracket is to be fixed to the ceiling (standard wall plugs, special anchors, wood screws in timber, etc.) and obtain the necessary fixing material.

3. Switch off or remove the fuse for the relevant part of the building (e.g. the flat, the school corridor) in the fuse box so that the ceiling connection is de-energised.
Have an electrician verify that the circuit is de-energised!

> **WARNING!** From this point on, there is a risk of electric shock if the circuit is not de-energised!

4. Make sure that the ceiling cable has three cores (L, N, PE).

> **WARNING!** The dp Pro must not be connected to a two-core cable! Otherwise there is a risk of injury from electric shock.

5. Where the cable for the ceiling light comes out of the ceiling, drill three holes for the ceiling bracket. Use the ceiling bracket itself as a template.

> **WARNING! Risk of injury from electric shock!** Make sure that no visible or concealed electrical cables or other lines can be drilled into! Ask an electrician if you cannot rule out the presence of cables with certainty.

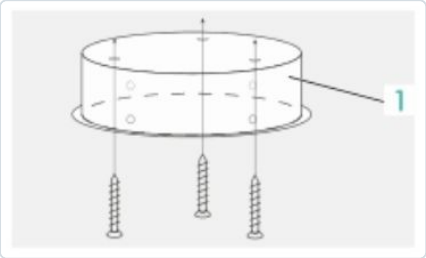

1 Ceiling bracket

6. Screw the ceiling bracket to the ceiling.

7. Thread the connection cable of the dp Pro through the pipe supplied. The ends of the pipe are marked “L” and “R”. The L end must point towards the housing.
The dp Pro can be ordered with different pipe lengths (20, 35, 45 or 60 cm). If the pipe length supplied does not suit the room height, you can order a new pipe or a pipe extension.

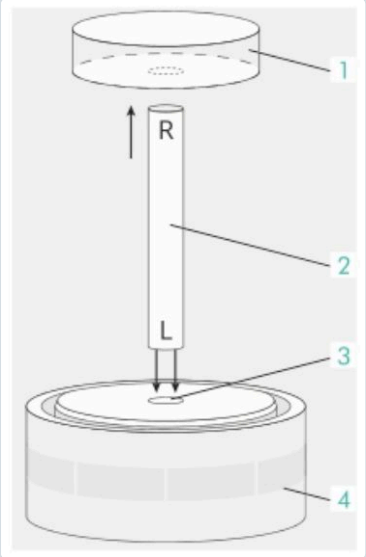

1 Canopy
2 Pipe
3 Pipe connector
4 Housing

© 2026 Dust and Pollution Air Purifier Lamp FZC

8. Screw the pipe onto the pipe connector of the housing.
9. Electrician: connect the cables coming from the housing and the power supply to the terminals in the ceiling bracket (see wiring diagram).

> **WARNING! Risk of injury from electric shock!** Cables and terminals must not be pinched. They must lie freely between the ceiling bracket and the canopy or run loosely into the pipe. Otherwise chafing points may develop where the cable insulation is cut through and conductors come into direct contact with the mounting material, including the pipe.

Wiring diagram

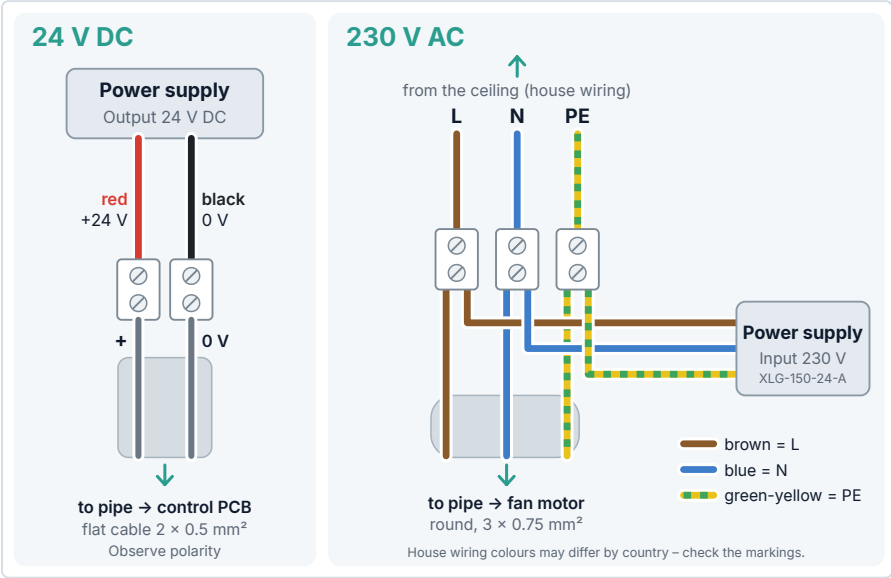

Left: 24 V DC side – output of the Mean Well XLG-150-24-A power supply (red +24 V, black 0 V) to the 2-core flat cable 2 × 0.5 mm², which runs through the pipe to the control PCB. Right: mains side 220–240 V AC – ceiling cable L, N, PE to the terminals; from there to the power supply input (brown L, blue N, green-yellow PE) and via the round cable 3 × 0.75 mm² (L, N, PE) through the pipe to the fan motor. L = live, N = neutral, PE = protective earth.

10. Connect the cable coming from the ceiling to the terminals in the canopy.
11. Slide the canopy into the ceiling bracket and secure it with 4 screws (flat head).

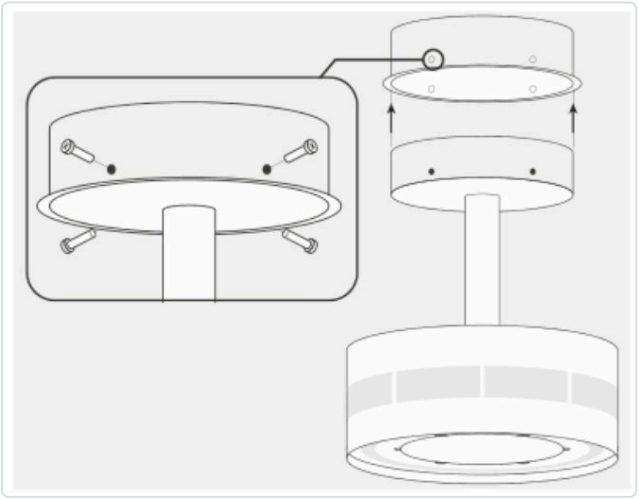

Slide the canopy into the ceiling bracket and screw it tight

© 2026 Dust and Pollution Air Purifier Lamp FZC

12. Check that the fixing securely holds the load of the dp Pro (11 kg), including possible additional forces (fan start-up, filter replacement, impacts, etc.).
13. Switch the fuse back on.
14. Switch on the dp Pro at the light switch.
    Ex works, the dp Pro is set so that the light strips light up at full power when voltage is applied. The fan is at a standstill.
    Check the functions of the dp Pro, see chapter 4.

© 2026 Dust and Pollution Air Purifier Lamp FZC

7 Transport, storage, uninstallation, disposal

Transport and storage

Transport and store the dp Pro in its original packaging. Observe the requirements for the storage location, see chapter 8 “Technical data”.

Uninstallation

Uninstall the dp Pro in the reverse order of installation, see chapter 6 “Installation”. **Observe all safety instructions given there!**

1. If the dp Pro is connected to a Wi-Fi network: disconnect it and activate the internal Wi-Fi hotspot, see chapter 4.
2. Make sure that the filter has not recently been exposed to increased humidity. The filter must be dry for storage so that no moisture, mould or odours develop in the filter.
3. Remove the filter and pack it airtight, see chapter 5. This prevents retained particles from escaping from the filter due to vibrations during transport and spreading inside the housing.
4. Make sure that the fuse is switched off or removed and that the ceiling connection is de-energised. **Have an electrician verify that the circuit is de-energised!**
5. Electrician: disconnect the wiring.
6. Remove the dp Pro including all fastening components.
7. Electrician: safely insulate the free conductor ends of the ceiling connection.
8. Switch the fuse back on.
9. Pack the dp Pro securely (preferably in its original packaging).

Disposal

The manufacturer takes back the dp Pro when it is no longer needed for recycling and proper disposal. For contact details see section “Manufacturer and service contact” on page 2.

If you wish to dispose of the device yourself, observe the locally applicable regulations for the disposal of waste electrical equipment.



The dp Pro bears the crossed-out wheeled bin symbol: in accordance with EU Directive 2012/19/EU, the dp Pro must not be disposed of with household waste as waste electrical equipment. The EU member states have set up corresponding collection and take-back systems.

© 2026 Dust and Pollution Air Purifier Lamp FZC

8 Technical data

General	
Product	dp Pro – ceiling-mounted air purifier with integrated LED lighting
Mounting type	Ceiling-mounted lighting system (ceiling bracket with pipe and canopy)
Housing colour	Polar white
Marking	CE-marked
Warranty	2 years
Specified service life	10 years
Dimensions and weight	
Housing	Ø 445 mm × height 227 mm
Available pipe lengths	20, 35, 45, 60 cm
Outer dimensions of original packaging	500 × 600 × 300 mm
Weight	11 kg
Electrical connection	
Voltage	220–240 V, single-phase (L + N + PE)
Frequency	50–60 Hz
Power consumption	min. 5 W / max. 120 W
Power supply	Mean Well XLG-150-24-A (24 V DC)
Luminaire protection class (EN 60598-1)	I
Degree of protection	IP20
Air purification	
Airflow	up to 550 m^3/h (max.)
Fan speed	variable, adjustable via app (manual/automatic)
Air distribution	360°, ceiling-mounted
Recommended room size	Living areas up to approx. 55 m^2 (depending on ceiling height, use and target air exchange rate) Recommended air exchange approx. 3 times per hour → recommended coverage approx. 183 m^3 For larger rooms, install several dp Pro units distributed across the room.
Filters	Standard configuration: HEPA H10 (pre-filter) + HEPA H14 Optional: activated carbon filter
H14 filter efficiency	≥ 99.995 % at MPPS according to EN 1822

© 2026 Dust and Pollution Air Purifier Lamp FZC

Filter life	approx. 2,200 operating hours; filter alert in the app at 80 % depletion
UV-C	4 encapsulated UV-C LED modules; irradiate only the filter surface inside the closed housing; people are not exposed; can be switched on/off via app Wavelength: 270–280 nm; power: 4 × 15 mW
Sound pressure level	40–65 dB
Light	
LED zones	3 independently controllable LED zones (top, middle, bottom), 3 × 14 W, dimmable
Luminous flux	1,410 lm in total
Colour temperature	2,700–6,000 K, continuously variable (warm white to cool daylight)
Light sources	The light sources cannot be replaced by the user.
Sensors (measuring range)	
Air temperature	−20 … 60 °C
Relative humidity	20 … 90 %
Particle sensor	Particle sizes 0.5 … 10 µm (PM0.5 … PM10)

The sensor values are for information only. Where documentation obligations exist, they do not replace the use of specialised measuring instruments.

Wi-Fi module and operation	
Wi-Fi standard	IEEE 802.11b/g/n, 2.4 GHz; data rate IEEE 802.11n: up to 150 Mbit/s
Network modes	Hotspot + LAN
Frequency range	2,412 … 2,484 MHz (centre frequency)
Transmit power	IEEE 802.11b: 19.5 dBm · IEEE 802.11g: 18.0 dBm · IEEE 802.11n: 18.0 dBm
App	“dp Air Purifier Lamp” for Android (Google Play Store) and iOS (App Store): air quality index, filter life, schedule, manual/automatic mode, UV-C switch, LED control
Other operation	Light switch of the building installation; remote control (included)
Ambient conditions	
Temperature	Operation: 0 … 40 °C · Storage: −20 … 60 °C
Humidity	Operation and storage: max. 90 % RH, non-condensing
Room	Indoors, not exposed to moisture, including rain. The dp Pro is not suitable for rooms with: ■ condensing humidity ■ hot air Dusty rooms (workshop, production) and small operating theatres: additional air cleaning, see chapter 2 Use is prohibited: ■ in potentially explosive atmospheres ■ where sparks reach the device directly (height min. 2.5 m)

© 2026 Dust and Pollution Air Purifier Lamp FZC

Simplified EU declaration of conformity according to Radio Equipment Directive 2014/53/EU

The manufacturer (see section “Manufacturer and service contact” on page 2) hereby declares that the radio equipment type dp Pro complies with Directive 2014/53/EU. The full text of the EU declaration of conformity is available at the following internet address: www.dp-purifier.com

The dp Pro is CE-marked; the CE marking is located on the nameplate.

Nameplate

The nameplate is located inside the housing. It becomes visible when the filter has been removed.

Nameplate shown as example; see technical data. Individual details on the nameplate shown (e.g. power rating, address, earlier product name) may differ from the current device. The technical data in this chapter and the contact details on page 2 apply.



© 2026 Dust and Pollution Air Purifier Lamp FZC

9 Privacy policy

Extract from the privacy policy of Dust and Pollution Air Purifier Lamp FZC. The full policy is available on the website www.dp-purifier.com.

6. dp Pro and use of the app

In addition to our products, you can also use our “dp Air Purifier Lamp” app on your devices and link it to our products. The data required for this and processed by us result from the input form in the app’s installation process and from the simultaneous opening or linking of your customer account. Your data is processed to provide the services offered as part of the app (online storage, customer and device management, device control, fault diagnosis) and thus on the basis of Article 6(1)(b) GDPR for the performance of the respective contractual relationship.

When linking the app to the respective device and controlling the device via the app, we also process characteristics identifying the respective user (e.g. IP address) and the device (QR code, device ID, serial number, software version), the app (software versions) and the devices on which you have installed the app (type of device used, e.g. smartphone or tablet PC, manufacturer, operating system version of the device, device ID), as well as further information on the times at which our service is used and on app settings.

When you use the app and the associated online services, various information is stored in the app or on our systems in log files. We may use the log files to ensure the operation of the app and the respective device, to identify and rectify faults and for security reasons (e.g. defence against hacker attacks). In this respect, the legal basis is also our overriding legitimate interest in providing our services without disruption (Article 6(1)(f) GDPR).

We store this data until all mutual claims arising from the respective contractual relationship with you have been fully settled and the retention periods under commercial and tax law to which we are subject have expired.

If you connect our active air purifiers (including the dp Pro) to a Wi-Fi network that gives the air purifier internet access, we transmit characteristics identifying the air purifier (e.g. IP address, serial number) and the filter load (particle load) since the last filter change. We use this information as a backup copy of the filter load data in the air purifier and, if you have given us your consent, to offer you replacement filters in good time. We store this data until the next filter change, but for no longer than 2 years.

© 2026 Dust and Pollution Air Purifier Lamp FZC